Caxton®
Bathroom Sink
K-2209

Features
- Vitreous china.
- Under-mount
- With overflow.
- Available with KOHLER Artist Editions designs.
- 17" (432 mm) x 14" (356 mm)

Recommended Accessories
K-8998 P-Trap

Components
Additional included component/s: 1193643 Basin Clamps.

ADA | **CSA B651**

Codes/Standards
ASME A112.19.2/CSA B45.1
ADA
ICC/ANSI A117.1
CSA B651

KOHLER® One-Year Limited Warranty
See website for detailed warranty information.

Available Color/Finishes
Color tiles intended for reference only.

Color	Code	Description
	0	White
	96	Biscuit
	47	Almond
	NY	Dune
	95	Ice™ Grey
	G9	Sandbar
	33	Mexican Sand™
	K4	Cashmere
	58	Thunder™ Grey
	7	Black Black™

Caxton®

Bathroom Sink

K-2209

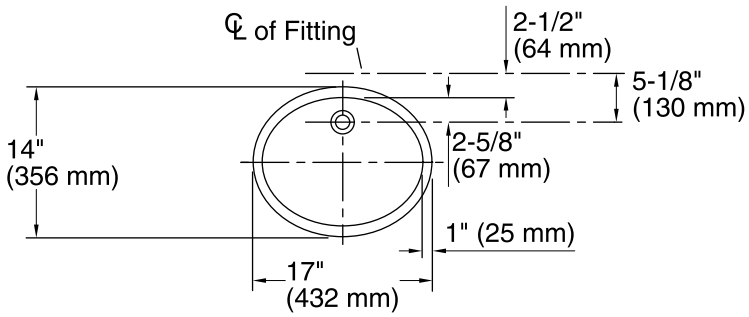

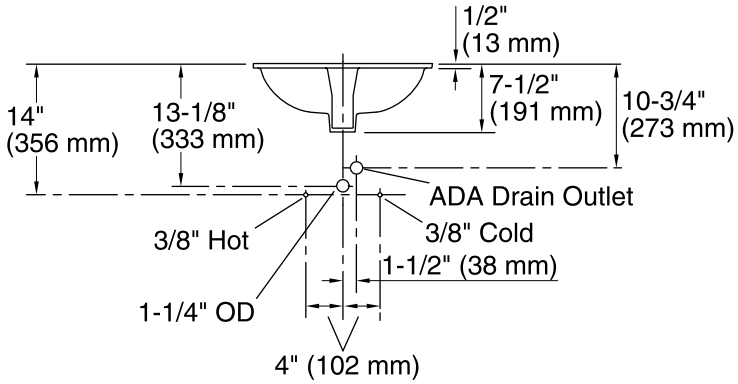

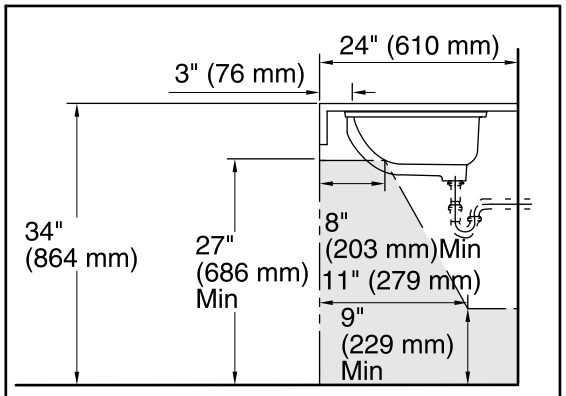

Recommended ADA Installtion

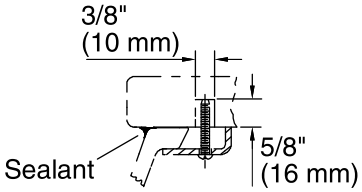

Marble Installation

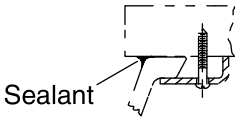

Wood Installation

Technical Information

All product dimensions are nominal.

Installation:	Under-mount
Bowl area	Length: 15" (381 mm) Width: 12" (305 mm) Water depth: 4" (102 mm)
Drain hole:	1-3/4" (44 mm)
Template:	85838-7, required, not included

Notes

Install this product according to the installation instructions.

NOTICE: Countertop manufacturer or cutter must use the current product template available at www.kohler.com, or by calling 1-800-4KOHLER. Kohler Co. is not responsible for cutout errors when the incorrect cutout template is used.

ADA, CSA B651 compliant when installed to the specific requirements of these regulations.